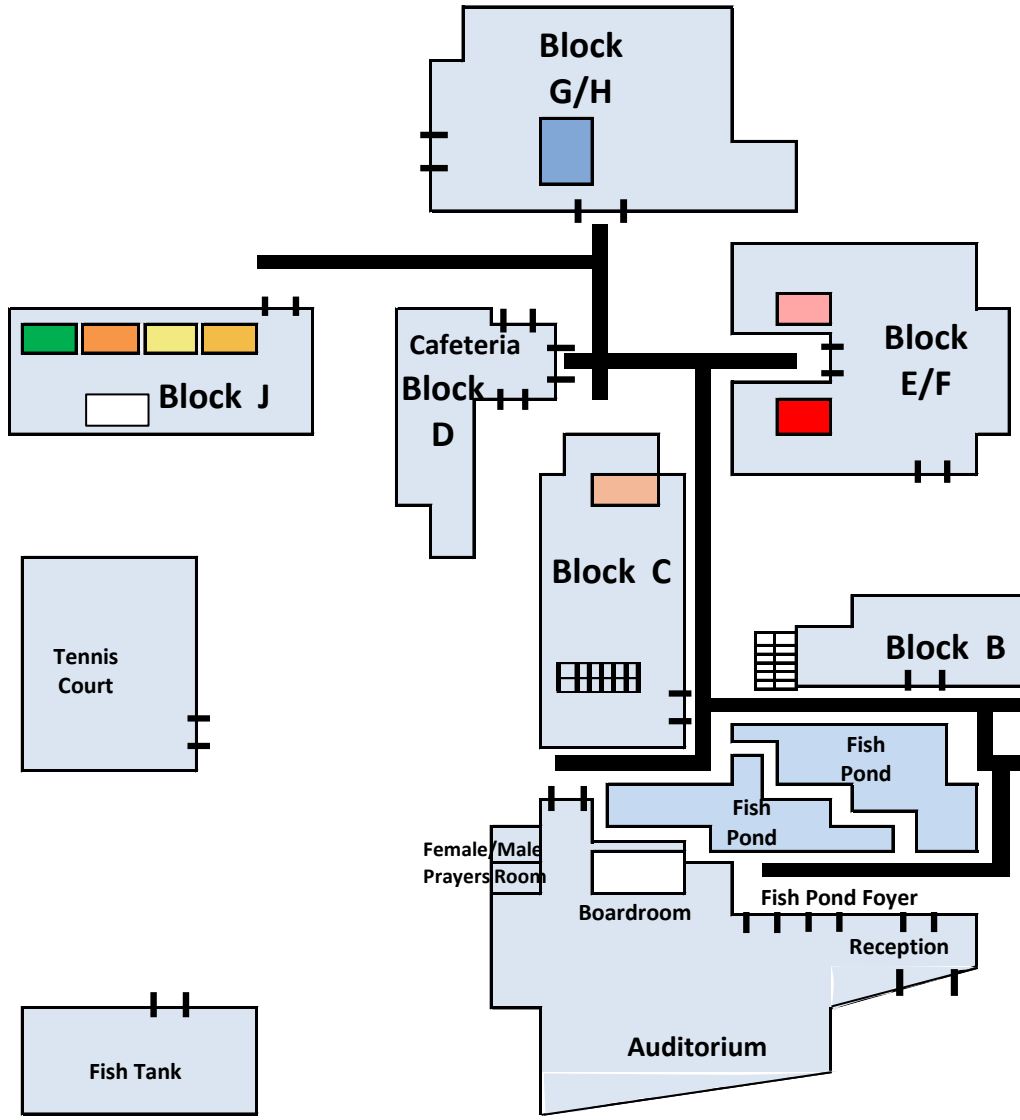

BLOCK	NAME	ROOM
A	ANCHOVY	HR MEETING ROOM
A	GUPPY	HR MEETING ROOM
A	GROUPER	Ex-MAIL ROOM
A	PERCH	HR TRAINING ROOM
A	MACKEREL	Ex-HR OFFICE
B	PARI	EMT CONFERENCE ROOM
C	KAMBALE	LIBRARY MEETING ROOM
E / F	GOBY	MEETING ROOM
E / F	EEL	DISCUSSION ROOM
G / H	FUGU	MEETING ROOM
J	PUFFER	IT LABORATORY
J	CHAMBO	MEETING ROOM 2
J	TILAPIA	MEETING ROOM 3
J	MAKUMBA	MEETING ROOM 4
J	CATFISH	BEHIND IPNI

	Entrance
	Stairs

MEETING ROOMS